Typhoon HIL602+.

The HIL legend reborn. Heavily upgraded and more powerful, with a faster processor, improved I/O and enhanced connectivity.

A HIL perfected for Power Electronics Engineers.

The 6-series flagship product HIL602+ has been in constant production for over five years, which is an unprecedented run for a HIL emulator. During these five years, it has been firmly established as a go-to solution for R&D, testing and pre-commissioning, and has won universal praise from engineers, enterprises and market research agencies around the world.

In short, the original HIL602+ is a tough HIL emulator to improve upon. Yet, that is exactly what HIL602+ offers you: every feature of the original HIL602 that you have grown to love and rely on, only improved and heavily upgraded, together with some new features.

www.typhoon-hil.com

Typhoon HIL602+.

Ultimate versatility in prototyping, testing and precertification.
Upgraded and refined.

Applications

Typhoon HIL602+ is an ideal all-around tool for development, automated testing, optimization, and automated standardized pre-certification of grid connected converters, automotive converters, electric propulsion drives for terrestrial and marine vehicles, and smaller microgrids.

Why upgrade?

Although the HIL602+ looks similar to its predecessor, it boasts significant upgrades under the hood which allow even easier interfacing with controllers under test and high-fidelity real-time emulation of more complex models.

For example, the bit-depth of analog inputs has jumped from 12 to 16 bits and their voltage ranges has doubled from ± 5 V to ± 10 V. Connectivity has also been expanded with RS-232, CAN and two Ethernet connectors on the back. Combine this with a new CPU and what you get is a fast, high-fidelity, versatile HIL simulator whose capabilities fit the model-based methodology for virtually any power electronics applications, ranging from grid-tied converters to mid-sized microgrids.

Features and Benefits

- Emulate of up to 6 converters with the new 6-core processor at a timestep of 500 ns.
- Emulate your power stage with up to 2 MHz update rate
- Give your controller an ultra-high-fidelity testing with 20 ns PWM resolution.
- Parallel up to 4 HIL602+ units for testing of smaller microgrids
- Interface to any controller by means of 32 analog outputs, 16 analog inputs, 32 digital inputs, and 32 digital outputs, all featuring over-voltage and short-circuit protection.
- Build your power-stage models with a constantly expanding library of power electronics components and prepackaged examples.
- Automate testing with Typhoon HIL API and Python scripts
- Integrate HIL into your existing test scenarios with support for language agnostic RCP API based on JSON-RCP 2.0
- Let your emulation communicate with external units and systems with standardized protocols, such as IEC 61850, Modbus, DNP3 and OPC UA
- Connect to host PC via Ethernet or USB2.0 .

HIL602+ highlights.

Test your controller with high fidelity, 20 ns sampling HIL.

20 ns PWM resolution combined with 1µs latency enables the most realistic power electronics controller test and development. For converter switching frequencies up to 200 kHz emulation error and latency are so small that it is difficult to tell the difference between real converter and HIL emulator measured waveforms.

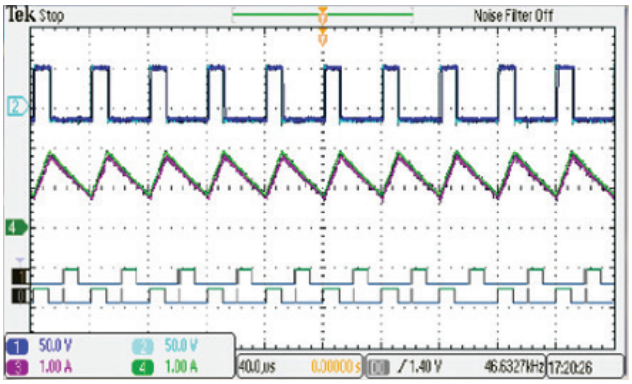

Ultra-high fidelity: magenta: real boost MPPT converter current; green: HIL boost current; dark blue: real boost inductor voltage; light blue: HIL inductor voltage.

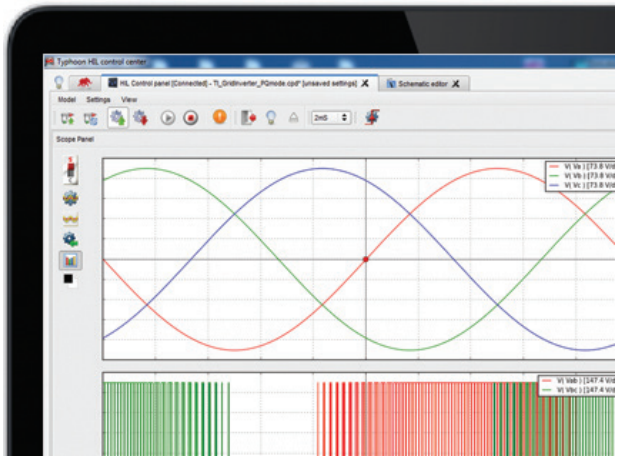

Capture HIL signals to quickly detect, debug, and characterize your controller performance.

Zoom in voltages and currents with Scope/*Capture Function's* microsecond "microscope."

Quickly debug control code with deep memory scope/capture function. Trigger on fault injection events and quantify the converter system response. With 1 Megapoint capture record length, on all 32 analog channels, and 1 MHz sample rate even tiny glitches in modulator algorithm are quickly identified.

Automate testing with Python: the ultimate ease of use.

Automate controller testing processes with Python scripting and HIL602+ platform. Discover the most comprehensive power electronics control software testing environment where fault injection such as grid disturbances, short and open circuits are just one Python command away. Use Python scripting and rich math function library to quantify system performance in spectrum of operating conditions under standard operating conditions and fault conditions (internal and external).

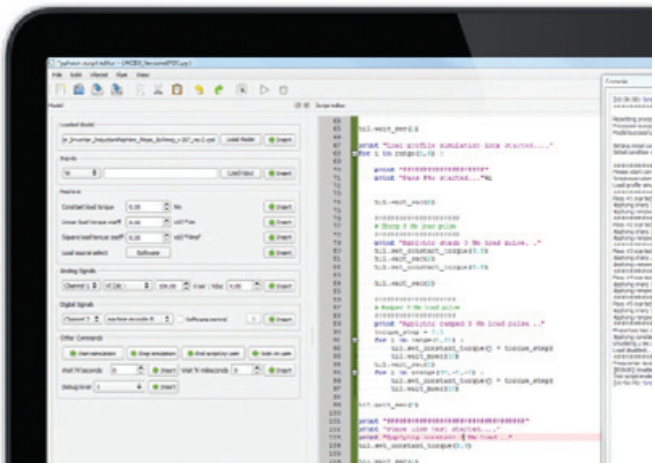

Automate testing with Python scripts to comprehensively and reproducibly test and qualify all your controllers.

HIL602+ use case.

Controller for centralized PV inverter with MPPT.

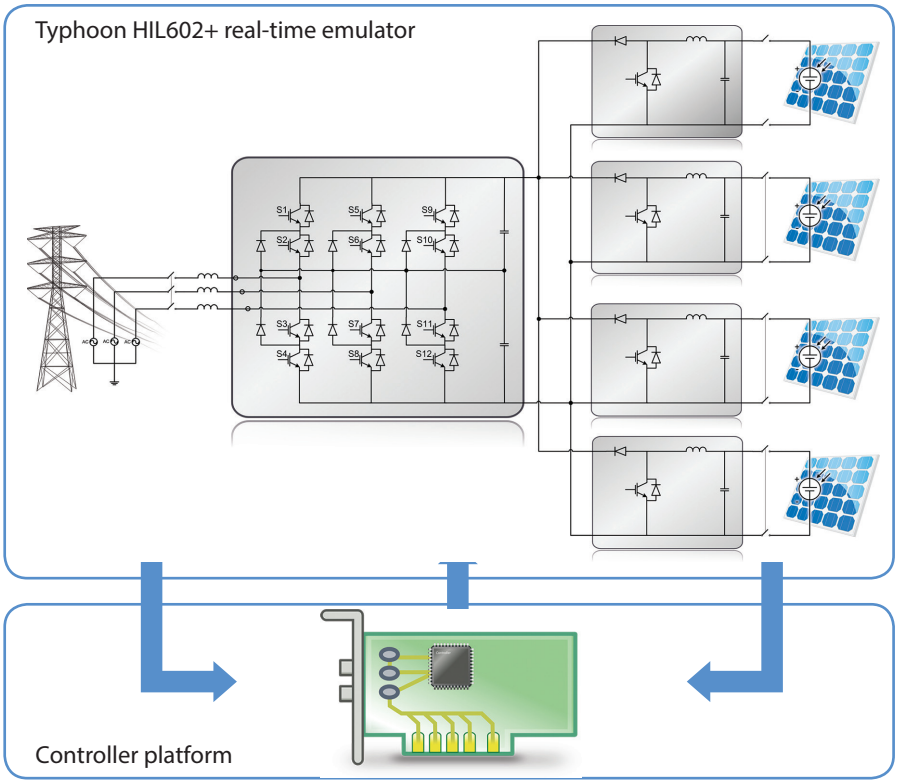

Control software development

In this case, complete control software for centralized PV inverter system, including four parallel MPPT converters is developed, tested and qualified using HIL. All the fast controller functions—such as PWM modulation, current and voltage control loops, maximum power point tracking etc.—as well as protection functions and high-level control functions (i.e. dynamic grid support) were tested and characterized using HIL. Control loop tuning and optimization was done on real controller platform interfaced with HIL602+. MPPT code was tested and verified using various illumination profiles (including partial shading) to confirm convergence to global maximum power point of PV panel. In addition current harmonic content was measured to verify filter parameters.

Testing and qualification

HIL602+, with its deep memory 1 Msample/sec/channel and 1 MHz sample rate scope/capture function, up to 6 parallel computation cores, and 20 ns sampling resolution, provides the most comprehensive, high-fidelity HIL emulation environment. It is tailored for test and qualification of grid connected converter systems grid compliance including dynamic grid support. Automated test scripts cover test cases required for obtaining grid compliance certificates, i.e. BDEW. Automated fault injection provides comprehensive environment for test and verification of control performance under grid faults (sags, dips, frequency disturbances, over voltages), component failures, and environmental conditions (i.e. solar illumination). Capture function enables detailed analysis of converter dynamics and analytical verification of grid code compliance.

MicroGrid Energy storage converter.

Develop Micro-Grid energy storage converter control system.

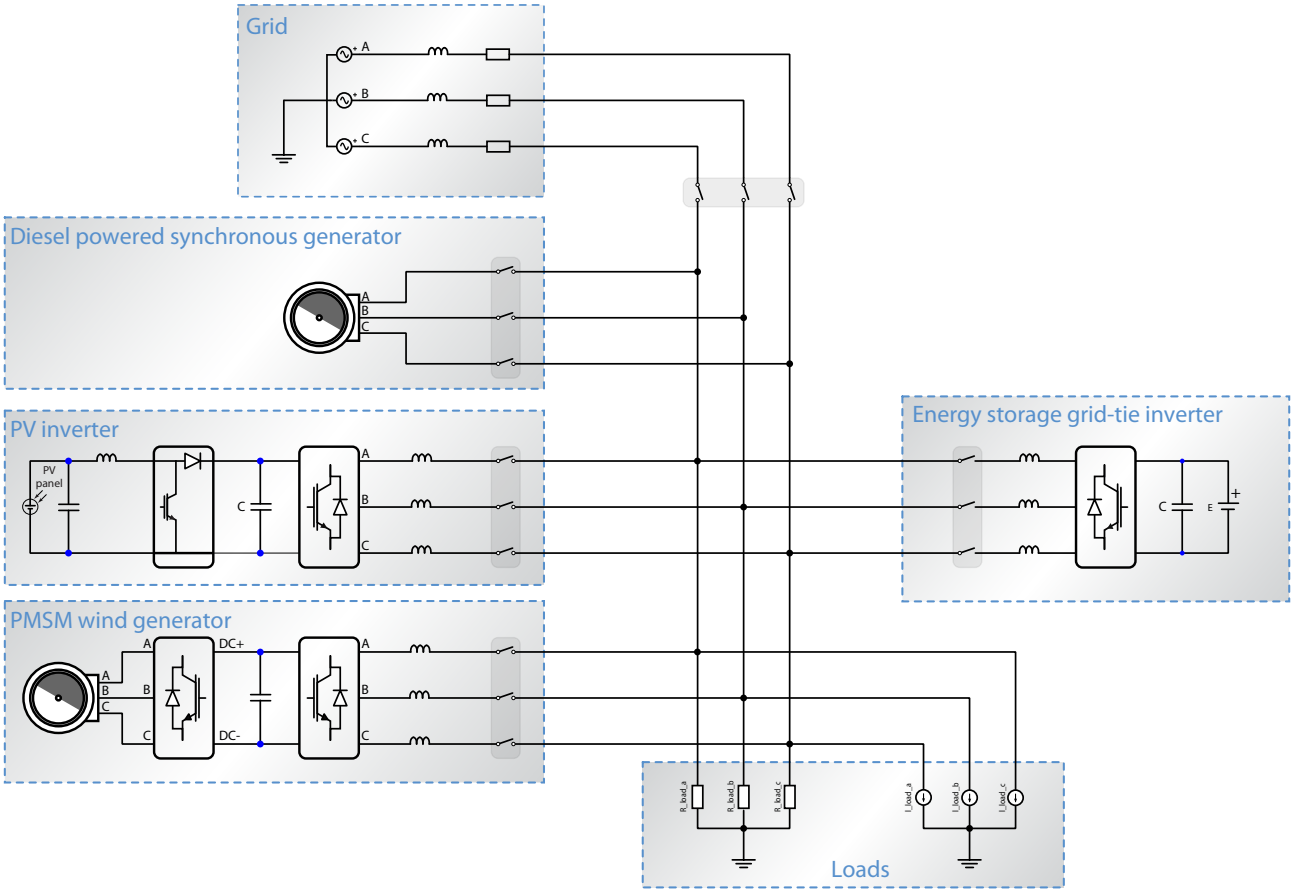

Energy storage inverter.

In this case, a complete control software for a *battery energy storage inverter system* is developed using HIL. Complete micro-grid is simulated with the *HIL602+ Cluster.* Micro-grid model implemented provides the most realistic environment for development and testing of micro-grid power electronics systems.

In this system micro-grid model comprises intermittent photovoltaic power source, permanent magnet synchronous machine wind turbine generator, diesel powered synchronous generator, variable speed motor drive, resistive load, nonlinear current load, utility grid and main contactor that emulates both grid-connected and off-grid operational regimes. A truly flexible and easy to use ultra-high fidelity real-time simulation environment.

Test, optimize, pre-certify.

Control loops design and optimization for the *energy storage inverter* is done on an industrial controller platform directly interfaced with the *HIL602+ Cluster* via *HILConnect*. All controller functions—i.e. PWM modulator, PLL, current and voltage control loops etc.—as well as protection and high-level control functions (i.e. dynamic grid support) are tested for different operating conditions.

Indeed, HILCluster is ideal for test and pre-certification of micro-grid power electronics converter controllers. Automated test scripts cover a spectrum of test cases (including fault conditions and system unbalance) that provide a cost effective solution for compete test and verification of control system performance. In addition, *HILCluster* provides easy to use development and test environment for system level micro-grid controller.

Develop a control system for a small- or medium-scale microgrid.

A cluster of paralleled HIL602+ allows you to develop, test and pre-certify a microgrid control system, or to streamline integration of multi-vendor microgrid components.

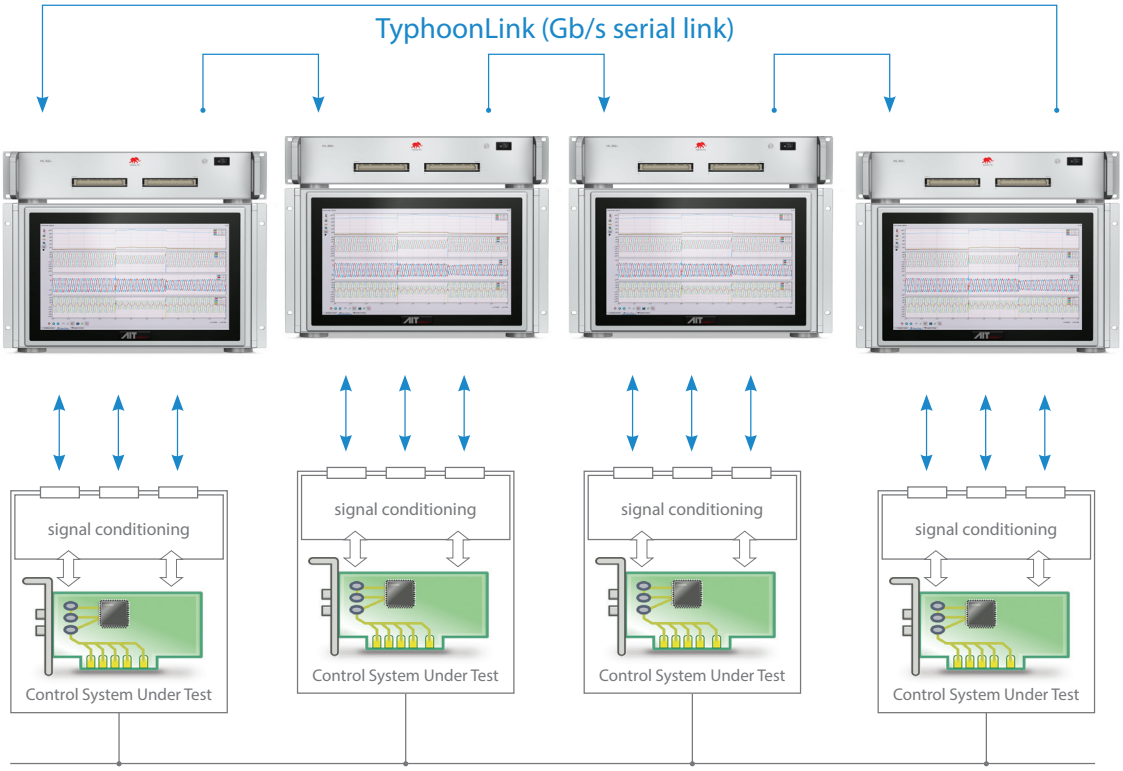

HIL602+ cluster for microgrid control developers

The HIL602+ has significantly improved paralleling capabilities. A cluster of paralleled HIL602+ units is a comprehensive environment that you can also use to design, test and pre-certify small and medium-size microgrid control systems. In a cluster of up to four HIL602+ units, you can emulate 16 or more converters. Different part of the model can run at different timesteps, e.g. 500 ns and 10 µs.
Cluster works and behaves as a single unit, only with the capability to emulate much bigger and more complex models. All functions, such as modeling in Schematic Editor, controlling and interacting with the emulation in HIL SCADA, acquiring data with scope and capture, and automating testing through Typhoon API and Python scripts, work exactly as if you were using a single HIL.

HIL602+ cluster for system integrators

System integrators can interface multiple controllers from multiple vendors to the high-fidelity microgrid emulation and troubleshoot and optimize their integration before the microgrid construction and installation has even begun.

This methodology works for both centralized and decentralized microgrid control configurations and allows you to test both low-level and application-/microgrid-level control layers. You can use automated testing and pre-certifying by means of Python scripts and Typhoon API. Additionally, you can also make your emulation communicate with external devices (e.g. protection relays) and software environments (e.g. SCADA) by means of IEC 61850, Modbus, DNP3, OPC UA or other industry standard communication protocols

Unified and integrated hardware-and-software HIL environment.

Intuitive and easy to master, Typhoon HIL's software allows a one-click direct interaction with your HIL602+, creating a unified environment for power electronics design, test automation and quality assurance.

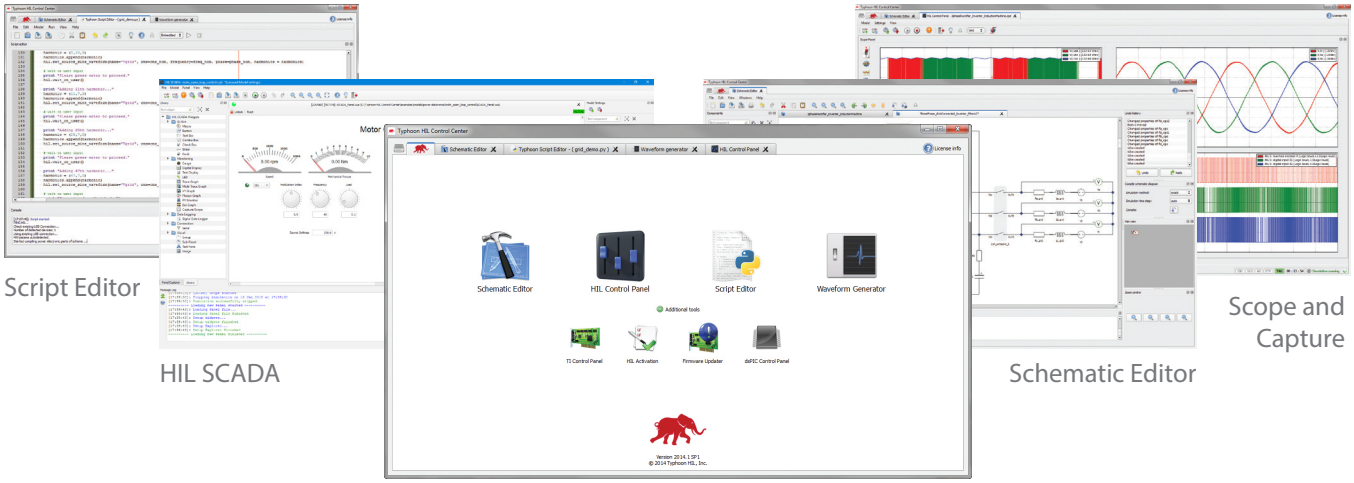

Script Editor

HIL SCADA

Schematic Editor

Scope and Capture

HIL Control Center

Unified experience.

HIL602+'s raw emulation power would mean little without software to control it and interact with it. Typhoon HIL's Control Center software is your single point of interaction with the entire HIL602+ setup. It comes packed with examples to get you started. Typhoon HIL's software is designed to simplify and streamline your everyday work with the HIL602+. It is devised to minimize the time it takes to create models and automate testing, giving you more time to focus on actual testing.

Typhoon HIL's software is intuitive and streamlined by design. Start by modeling power electronics converters in the drag-and-drop Schematic Editor using a library of passive elements, converters, sources and machines. Once your model is done, click a single button to rapidly compile the circuit into machine code that is runs on your HIL602+. Then, with another click, launch the real-time simulation. Monitor and control your emulation in fully-use-configurable HIL SCADA. Select the signals you want to see on the scope, change sources and parameters, and insert faults for a fully interactive experience. Of course, the entire process can be fully automated, which also includes automatic test report generation.

Discover simplicity.

Schematic Editor, a vector-graphics circuit editor, is where you do all your modeling. It is also place to do the rapid control prototyping by means of the constantly expanding Signal Processing Toolbox. In Schematic Editor you also take care of communication functionalities by means of drag-and-drop comunication blocks. Your finished models are compiled for real-time execution with a single click.

HIL SCADA is fully user-configurable environment for monitoring and controlling your real-time emulation, as well as for test automation and data acquisition. It allows you to create a custom user interface by simply dragging-and-dropping various control and monitoring widgets. HIL SCADA also allows you dynamic routing of all signals and comes with a rich library of test scripts for testing grid compliance, protection, etc.

Control Center also includes a waveform editor for source definition and Script Editor for automatic testing via Python Scripts or Typhoon API. Even standardized tests, such as BDEW and UL 1741 SA, and automatic test reports are launched from Control Center, without ever switching to a different piece of software.

Automatic, language-agnostic HIL testing.

Test your power electronics controls until you run out of bugs to fix, not time and money. With Python scripts and Typhoon API write test script libraries to test your designs under all operating conditions, faults, and even in corner cases.

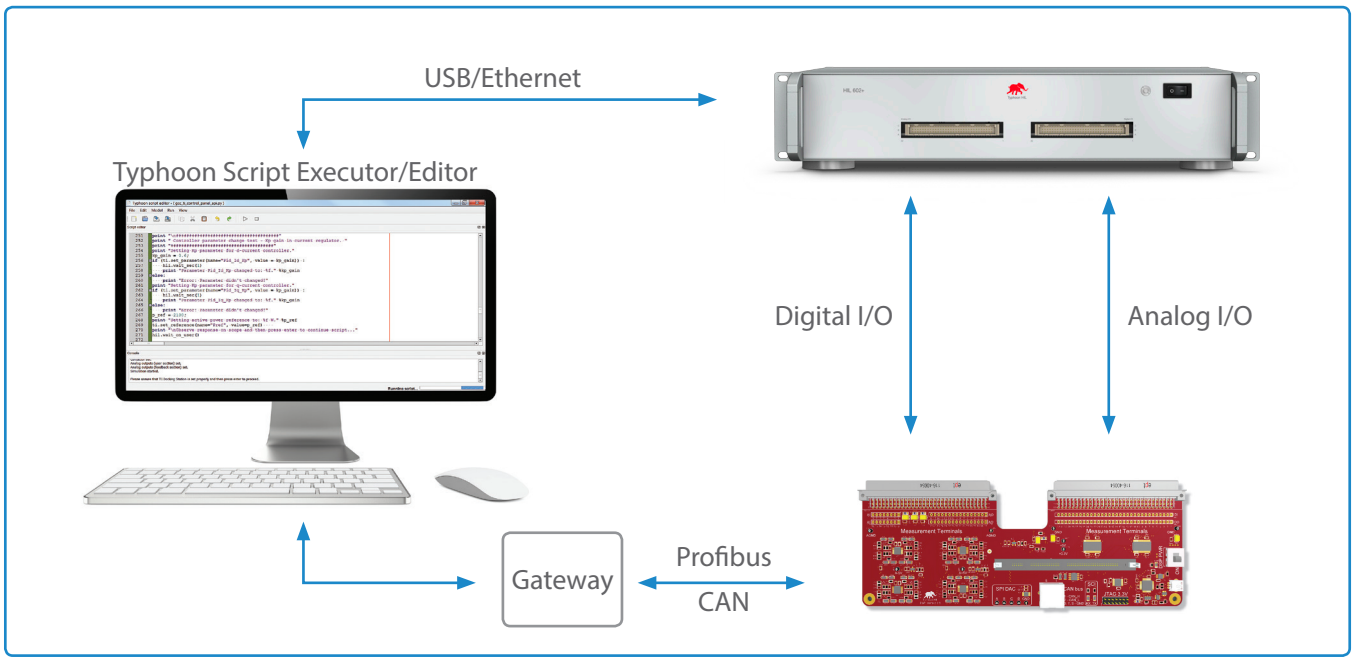

Automate testing with Python scripts

Typhoon Script Editor enables you to build and execute test libraries to exhaustively test all aspects of a controller. Program test sequences under a spectrum of operating conditions, including faults. For grid connected converters, test dynamic grid support, i.e. low voltage ride through, active and reactive power injection, protection etc. Use the library of test scripts to test in accordance with dynamic grid support standards such as German BDEW or American UL 1741 SA. In drives applications, program various drive cycles and test fault responses under both internal and external faults.
For example, inject short and open circuit faults, switch faults, and test against parameter variations. Define performance envelopes and verify the system compliance.

The power of API.

Typhoon API comprises: HIL Control Panel API, Schematic Editor API, Texas Instruments DSP Control Panel API, and Test Executor. *HIL Control Panel API* provides an interface with the target HIL and enables control of the simulation process and all functions available through Control Panel. *Schematic Editor API* provides programmatic interface to manipulate existing schematic diagrams. It enables changing circuit parameters, compiling a circuit, setting target hardware platform, time step, simulation method etc. *Texas Instruments DSP Control Panel API* provides programmatic interface to control TI docking station and change controller parameters. *Test Executor Test* enables running one or more python scripts and generates html report files with test results.

TYPHOON HIL REAL TIME EMULATOR
Model : HIL 602+

TECHNICAL SPECIFICATIONS

A. REAL TIME Emulators (Hardware)

1. Processors :

- Main Processor: 6-Core FPGA for enabling short compilation time and low latency for small time-step, simulation.
- Co-processors: 2x ARM, for simulation in signal domain.

2. System Capability:

- Controller HIL and real-time simulation of maximum 6 switching converter models (3ph, 3 levels) with simulation time-step down to 500ns.
- Controller HIL and real-time simulation of maximum 30 averaged converter models (3ph) with simulation time-step down to 500ns.
- Real-time simulation of 120 (3-phase) nodes/busses with full complexity at starting from 3µs to 1s simulation time-step.
- Real time simulation of power electronic converters with switching frequency of up to 200 KHz.

3. Option for External Interface*: In-built I/O*

- 16 Analog outputs fully selectable with ± 10V range, 1 MSPS update rate, 16-bit resolution and 1% accuracy, ± 24V Tolerant ESD protection.
- 32 Analog inputs fully selectable with ± 10V range, 1 MSPS update rate, 16 bit resolution, 1% accuracy, ± 24V Tolerant ESD protection.
- 32 Digital outputs with at least 12 channels capable for PWM modulation with 7ns resolution, ± 24V Tolerant ESD protection.
- 32 Digital inputs, 50MHz sample rate with 20ns sampling resolution on all channels, ± 24V Tolerant ESD protection.

4. Academic Package Added Capabilities :

- The simulator supports multiple configurations without making any physical changes into hardware.
- Lifelong, Free Firmware update is made available for all supported configurations by Simulator.
- Connectivity: Ports for communication over standard communication protocols, including USB, Ethernet/IP, CAN, Modbus, IEC61850 Goose.
- Scalable to multiple units (In case multiple device cascading is required in the future).
- Input Power supply is 100-250 Volts, 60W.

B. Simulation Software with Real Time Interface :

Simulator is not dependent on any third-party simulation Software. It has own simulation software with below mentioned specifications:

- Permanent software license for modelling as well as for Real-time Interface with lifetime free updates and an unlimited number of software users.
- Academic premium toolbox package with Graphical User Interface (GUI/SCADA).
- Modeling environment for plant as well as Signal Processing with embedded library of components and toolboxes like, *i) Converter toolbox, ii) Microgrid toolbox, iii) Power System toolbox, () Power Electronics Tool Box iv) Signal processing toolbox, v) Test Suite and vi) Communication toolbox having IEC61850, UL 1741, CAN Bus protocol, Ethernet, DNP3, MOD Bus protocol etc.*
- All the switching components in library have Internal (for simulation and real-time simulation) or external (HIL simulation) both control option during modeling.
- Ability to run Plant simulation without controller if required for feasibility testing of plant.
- High resolution built-in real time signal monitoring oscilloscope with 16 channels.
- Dedicated solvers for switching devices, machines, signal generators, LUTs, etc. are available with simulation software.
- Simulation of numerical signals with multiple execution rates
- Test environment for testing models and generating Test-Reports.
- Scripting Environment based on python. In-built API for automation as well as for communicating with other simulation software.
- Option for importing code generated for controller from simulation software like MATLAB, Simulink, LabView, PSIM etc.
- Option for importing .dll files generated from PSCAD, EMTP, PSSE-DigSilent etc.

C. The laboratory resources listed above is suitable for the following applications :

1. Pre-certification of smart inverter controllers.
2. Grid connected converter applications.
3. Power System and its applications
4. Renewable energy applications.
5. Microgrid and Smart Grid applications.
6. Parallel and Multilevel converter topologies.
7. Electrical and industrial drives applications.
8. Electric Vehicle Application

Specifications are subject to change without notice

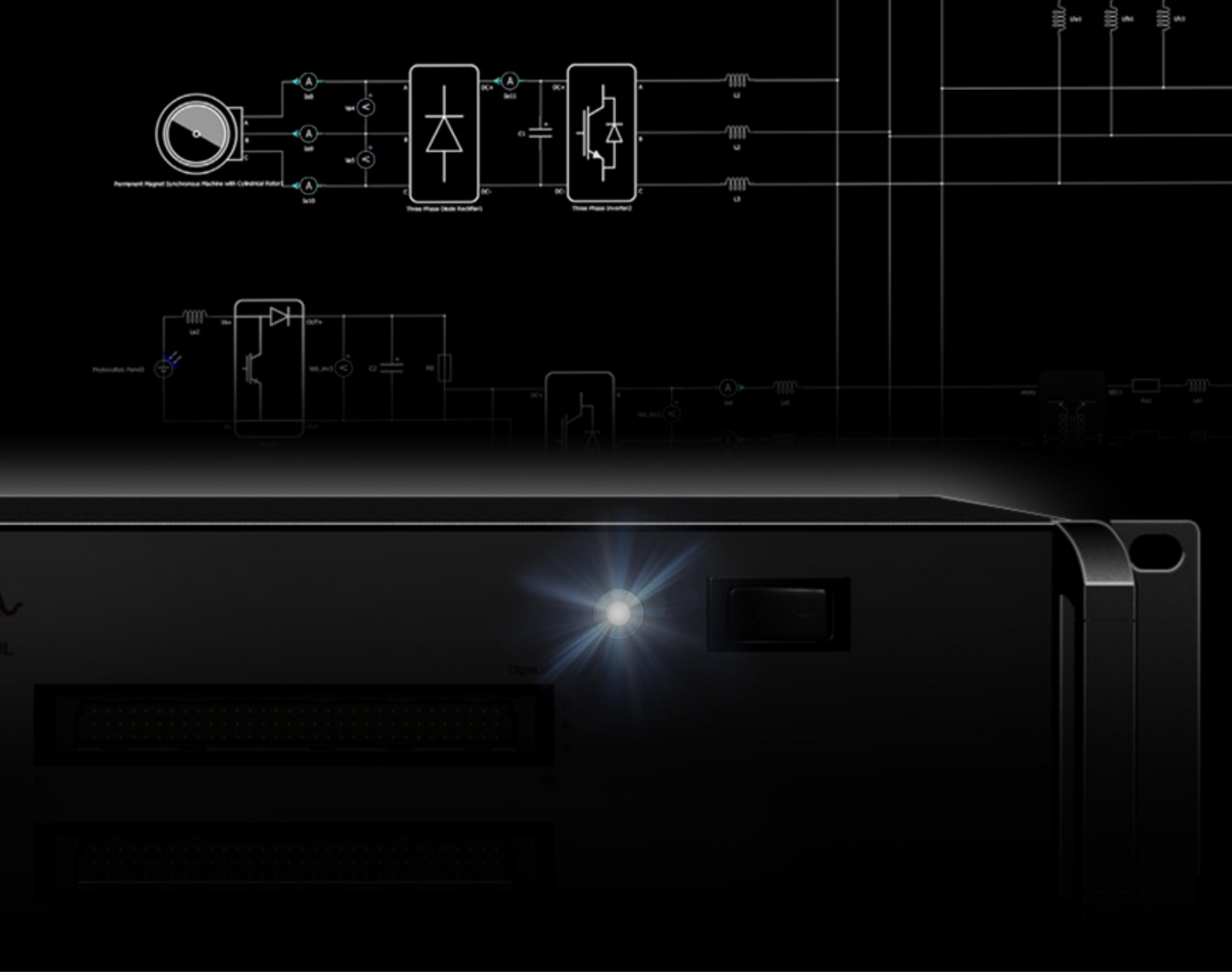

Typhoon HIL, Inc.
15 Ward Street, 2nd Floor,
Somerville, MA 02143
USA

Phone: +1 800-766-3181

Typhoon HIL GmbH
Technoparkstrasse 1
CH-8005 Zürich
Switzerland

Phone: +1 800-766-3181

Tajfun HIL d.o.o.
Bulevar Oslobodjenja 69/V
21000 Novi Sad
Republic of Serbia

Sales: +381 21 3010 474
Tech support: +381 21 3010 476

www.typhoon-hil.com
e-mail: info@typhoon-hil.com

Authorized Distributor :

QUARBZ Info Systems, INDIA

www.quarbz.com, e-mail: hil.info@quarbz.com

Contact no.:91 9838071684, 91 9838071685

Typhoon HIL